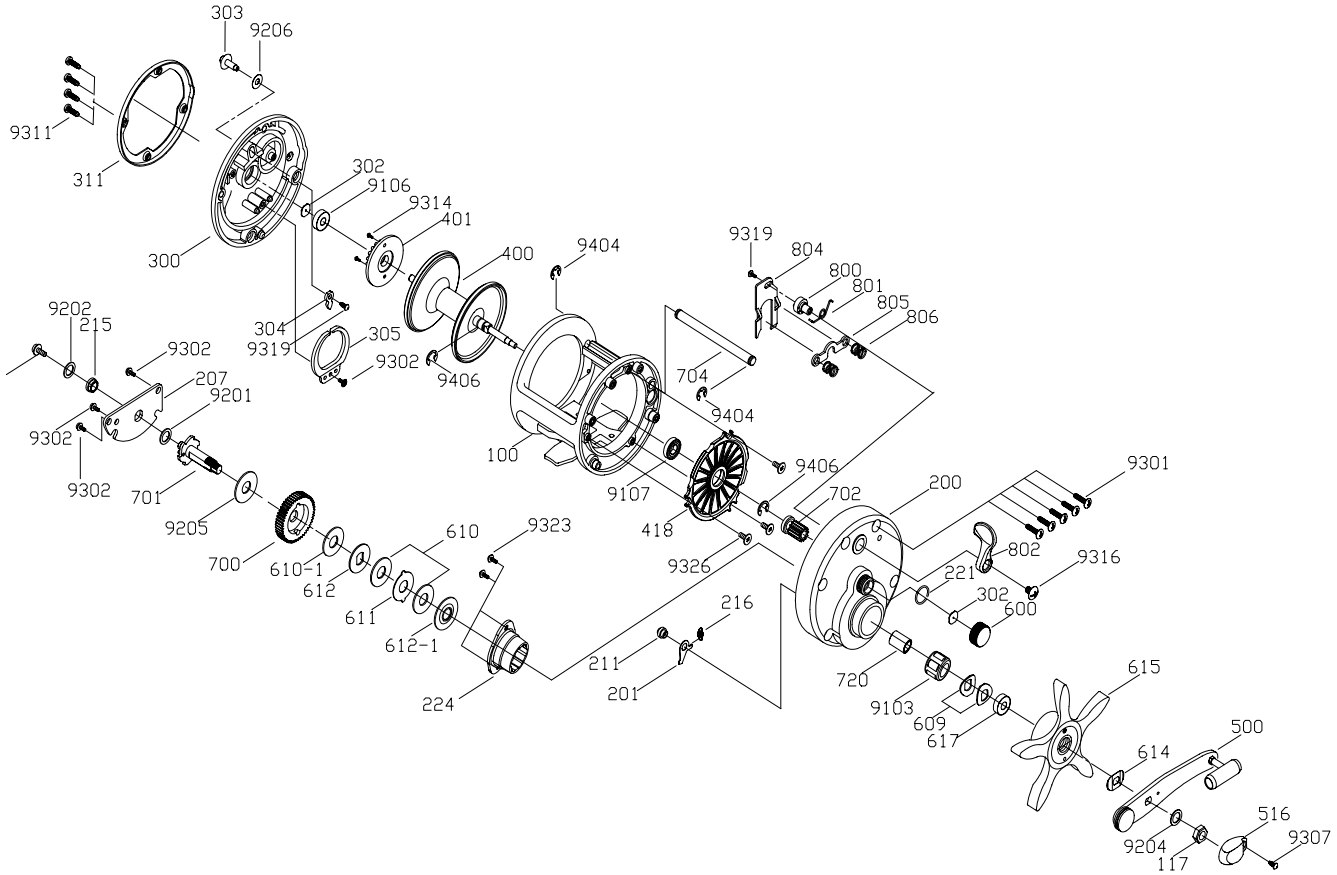

CN - 30C Spare Parts

key no	new part no	old part no	parts name	lot no	key no	new part no	old part no	parts name	lot no
100	11000932	1110002401831	MAIN BODY ASSY		702	17020023	11702005-061	PINION GEAR	
117	11170012	11117007-03001	NUT		704	17040010	11704006-03	LINE GUIDE SUPPORT BAR	
200	12000808	11200051-01A06C	HANDLE SIDE PLATE		720	17200002	11720002-06001	DRIVE GEAR SHAFT BUSHING	
201	12010001	11201001-06	ANTI-REVERSE PAWL		800	18000005	11800002-02002	CLUTCH CAM	3031
207	12070046	11207011-03001	HOLDED PLATE		800	18000008	11800002-12002	CLUTCH CAM	
211	12110008	11211002-03001	ANTI-RE PAWL PIN		801	18010001	11801001-06	CLUTCH SPRING	
215	12150015	11215011-03001	HOLD PLATE BUSHING		802	18020011	11802003-0183	CLUTCH BAR	
216	12160001	11216001-06	ANTI-RE PAWL SPRING		804	18040001	11804001-06	CLUTCH CAM SLIDER	
221	12210001	11221001-07	"O"RING		805	18050001	11805001-06	PINION GEAR YOKE	
224	12240004	11224001-02905	ONE WAY BEARING CAP	3109	806	18060002	11806001-061	YOKE SPRING	
224	12240017	0	ONE WAY BEARING CAP		9103	0910163	01101612-62	BALL BEARING	3101
300	13000394	11300025-0183	SIDE PLATE		9103	0910170	01101612-63	BALL BEARING	
302	13020014	11302002-06001	WASHER		9106	0910012	01041104-601	BALL BEARING	
303	13030005	11303004-03907	CLICK BUTTON		9107	0910029	01061335-601	BALL BEARING	
304	13040001	11304003-06	CLICK PAWL		9201	0920283	025.1x8x0.5-6	WASHER	
311	13110020	11311004-06001	SIDE PLATE COVERS		9202	0920114	025.1x9.5x0.2-6	WASHER	
400	14000407	1140003314005	SPOOL ASSY.		9204	0920291	025.9x10x0.2-6	WASHER	
401	14010026	1140101101	CLICK GEAR		9205	0920327	028.1x18x1-1	WASHER	3036
418	14180002	11418002-01001	SPOOL BEARING FIXED PLATE		9205	0920339	028x15x1-1	WASHER	
500	15000144	1150000606003	HANDLE ASSY.		9206	0920085	024.05x10x0.2-8	WASHER	
516	15160001	115160001-01	HANDLE NUT RETAINER	3052	9301	0930799	03423x12.5-61	SCREW	
516	15160002	11516001-011	HANDLE NUT RETAINER		9301	0930802	03423x13-61	SCREW	2944
600	16000038	11600014-03001	CAST CONTROL CAP		9302	0930219	03327.52.6x6-61	SCREW	
609	46090001	14609001-05907	WASHER	3022	9307	0930226	03412.6x4-61	SCREW	
609	46090002	14609001-06001	WASHER		9311	0930588	03223x12-61	SCREW	
610	16100010	11610004-006	DRAG WASHER		9314	0930152	03212x5-61	SCREW	2949
610-1	16100032	11610013-000	DRAG WASHER		9314	0930501	03212x5-617	SCREW	
611	16110005	11611005-06	EARED WASHER		9316	0930732	03414x5-617	SCREW	
612	16120027	11612007-06001	KEY WASHER		9319	0930196	03312x5-61	SCREW	
612-1	46120002	14612001-06001	KEY WASHER		9321	0930202	03319.4x3x7-61	SCREW	
614	16140001	11614001-06	SPRING WASHER		9323	0930171	03222.6x4.5-61	SCREW	
615	16150049	11615007-04002C	STAR DARG KNOB		9326	0930673	03327x2.6x4-61	SCREW	
617	16170002	11617005-03	DRIVE GEAR SHAFT BUSHING		9401	19000001	11900001-06	E RETAINER	2936
700	17000203	11700006062	DRIVE GEAR		9404	29000001	12900001-06	E RETAINER	
701	17010094	1170102113001	DRIVE GEAR SHAFT		9406	29000006	12900006-06001	C RETAINER	